HP-SS-401

City Bus

SPRING SEESAW / PRODUCT FACTS

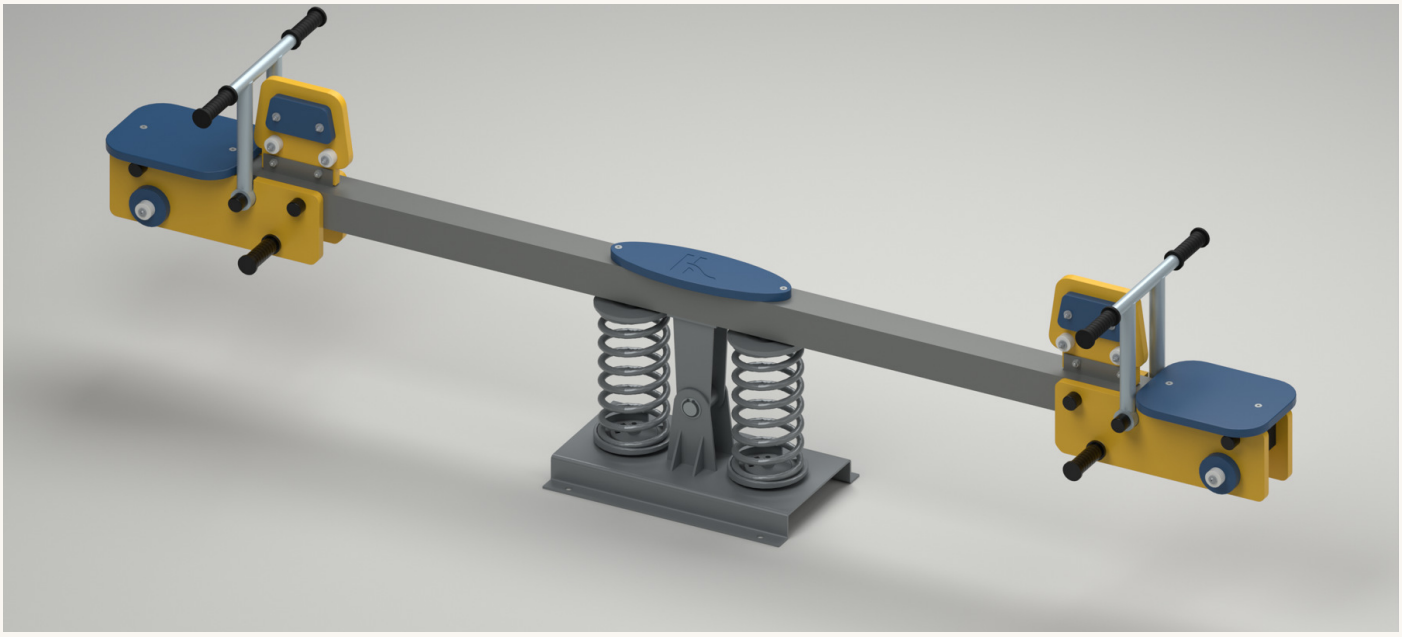

Yellow bus fronts meet dark blue windows and white circular lights. City Bus repeats the vehicle motif at each end, with decorative wheels and side panels completing the outline.

Overall model size	**2600 x 490 x 703 mm**
Neutral seat top	**484 mm above model base datum**
Seating layout	**2 seating positions; one at each end**
Model materials	**PE panels / steel frame; material grades provisional**
Calculated model mass	**65.5 kg - theoretical estimate, not measured net weight**
Panel / beam dimensions	**19 mm PE; 2530 x 80 x 80 x 3 mm beam**

HOW TO READ THIS SHEET

Page 1 records model facts and a conditional mass calculation. Page 3 contains new design proposals. This revision is for review, not permission to manufacture, install or open for use.

Dimensions & interface

Model dimensions in mm. Reference views are not to scale.

01 / FRONT

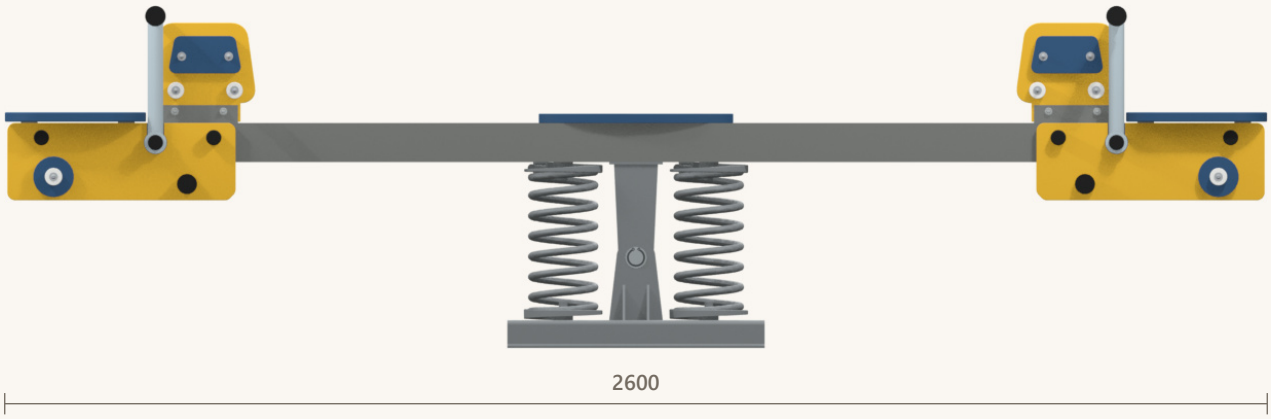

02 / SIDE

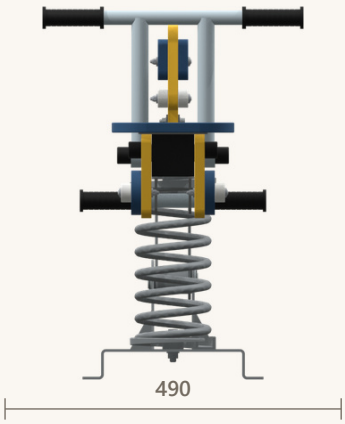

03 / TOP

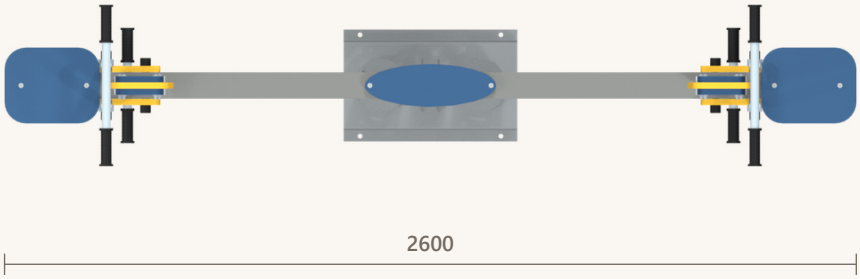

04 / BASE ANCHOR INTERFACE

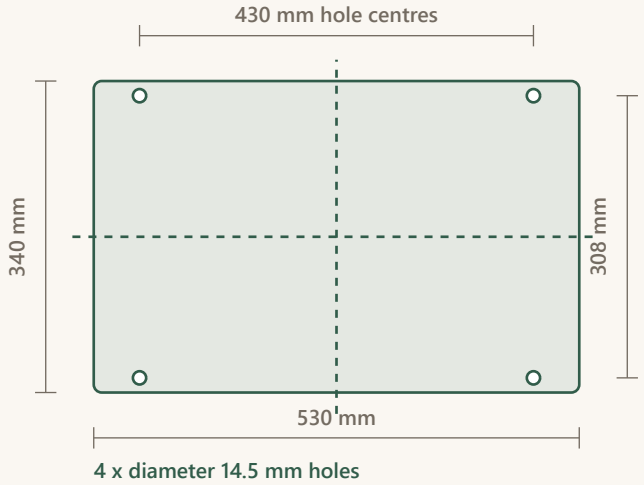

Base: 530 x 340 x 57 mm; nominal folded plate thickness 5 mm. Hole centres: X = +/-215 mm, Y = +/-154 mm from the model centre. Hole diameter does not specify an anchor size or capacity.

The installer needs a site-specific foundation and anchor design, including concrete, soil, edge distances, embedment, bolt grade and tightening values. This interface drawing is not a footing construction detail.

Proposed project specification

Design brief for review. Proposed values are not tested ratings.

Intended age - proposal	3-8 years; requires representative fit and motion assessment
User / load objective	2 seated users; 50 kg per seat / 100 kg combined design objective. Not a safe working load.
Space reservation	6.50 x 4.30 m (27.95 m2), preliminary planning allowance
Fall-height planning	Model envelope upper bound 1.59 m above datum; not measured free height of fall. See common guide.
Surfacing - proposal	Impact-attenuating system with documented critical fall height at least 2.0 m, conditional on the guide assumptions
Finish - proposal	Outdoor PE; corrosion-protected steel with exterior polyester powder coat; spring-maker-approved coating
Care - proposed schedule	Before opening: visual check. Monthly: functional inspection. Annually: detailed competent-person inspection.
Warranty - draft offer	24 months from delivery for material/workmanship defects. Commercial proposal only; see common guide.

MASS METHOD / READ WITH THE COMMON GUIDE

Sum of listed part-instance volumes x assumed material densities. Estimated model mass: 65.5 kg. Springs, unspecified bearing materials and provisional grades limit accuracy. No measured tolerance is claimed. Coatings, weld additions, separate site anchors, concrete and packaging are excluded.