HP-SS-203

# Elephant Buddies

SPRING SEESAW / PRODUCT FACTS

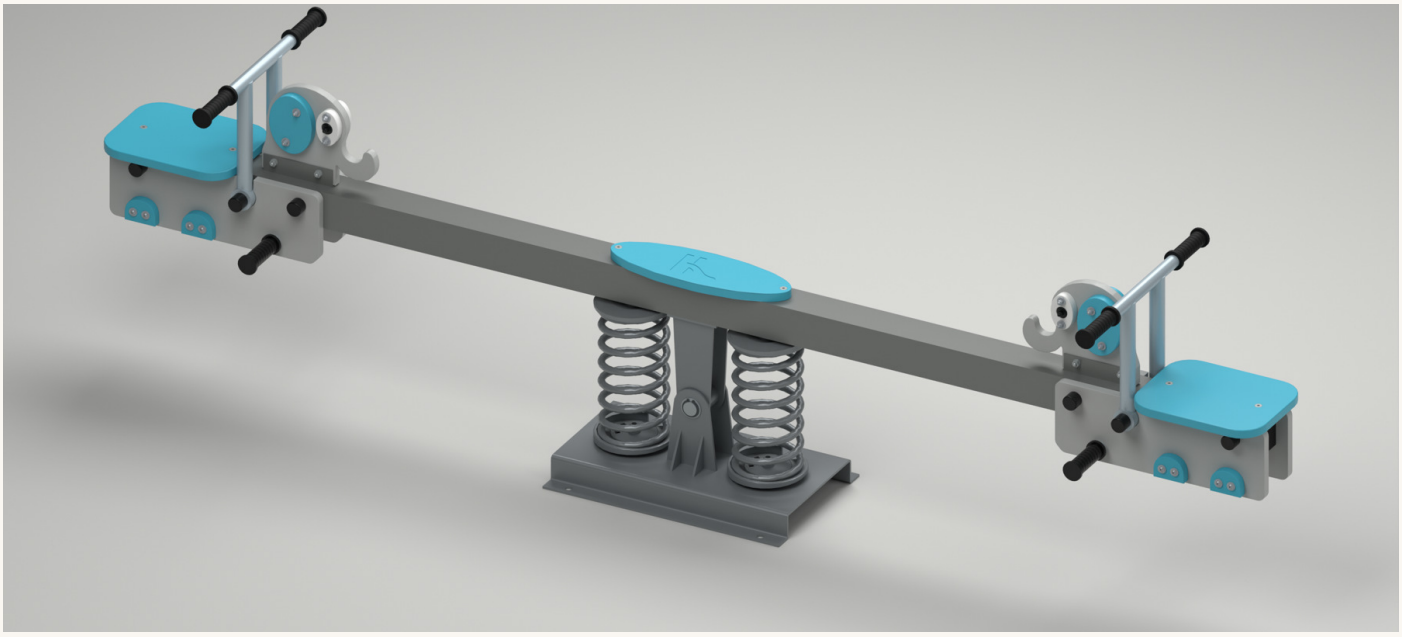

Elephant Buddies combines a light-gray head with a broad curled trunk and large sky-blue ears. Blue seats and decorative feet carry the colour through the lower panels.

| | |
|---|---|
| Overall model size | **2600 x 490 x 703 mm** |
| Neutral seat top | **484 mm above model base datum** |
| Seating layout | **2 seating positions; one at each end** |
| Model materials | **PE panels / steel frame; material grades provisional** |
| Calculated model mass | **65.7 kg - theoretical estimate, not measured net weight** |
| Panel / beam dimensions | **19 mm PE; 2530 x 80 x 80 x 3 mm beam** |

HOW TO READ THIS SHEET

Page 1 records model facts and a conditional mass calculation. Page 3 contains new design proposals. This revision is for review, not permission to manufacture, install or open for use.

# Dimensions & interface

Model dimensions in mm. Reference views are not to scale.

## 01 / FRONT

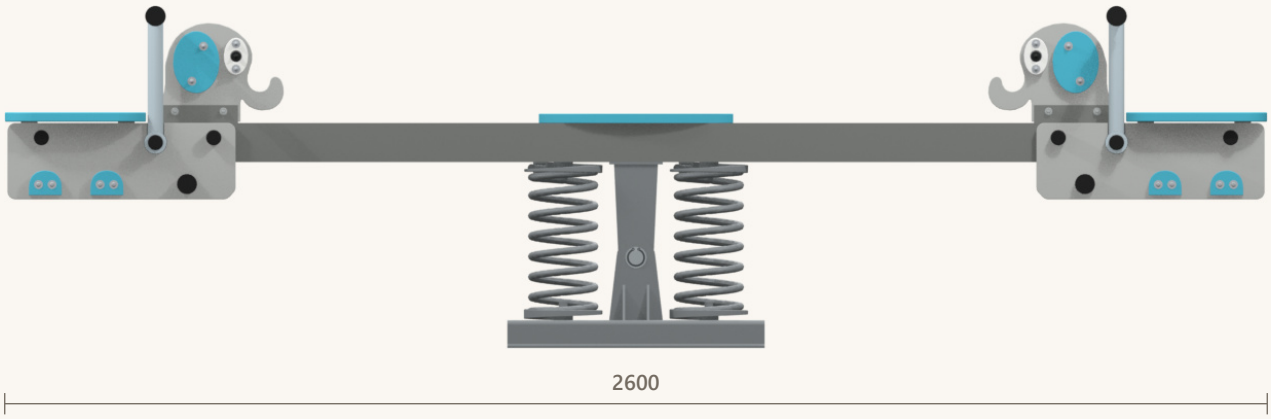


## 02 / SIDE

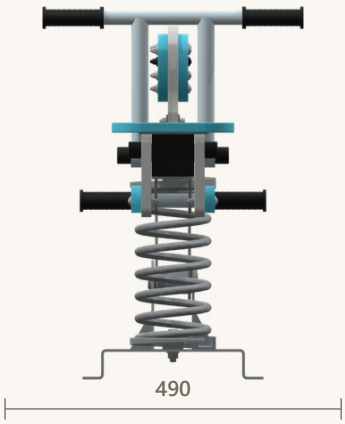


## 03 / TOP

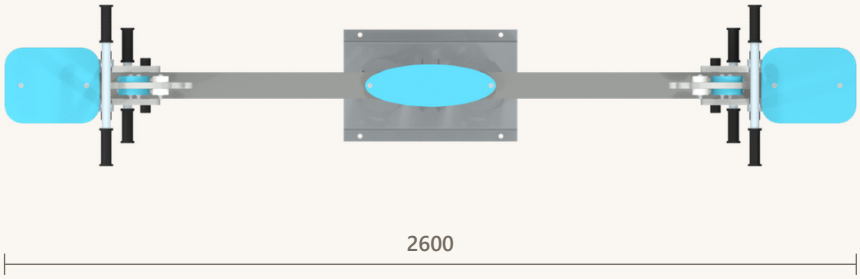


## 04 / BASE ANCHOR INTERFACE

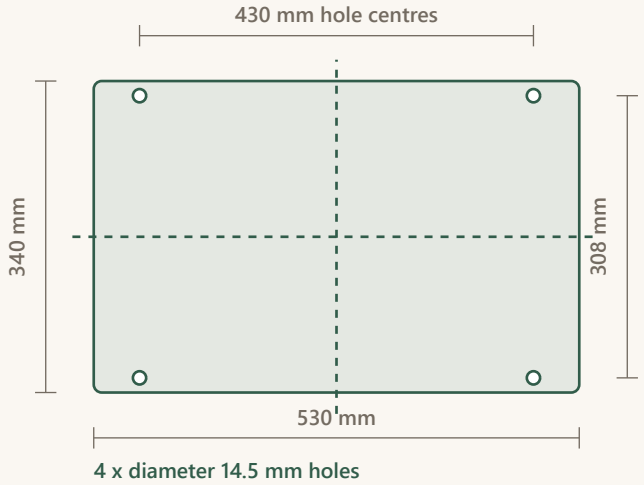


Base: 530 x 340 x 57 mm; nominal folded plate thickness 5 mm. Hole centres: X = +/-215 mm, Y = +/-154 mm from the model centre. Hole diameter does not specify an anchor size or capacity.

The installer needs a site-specific foundation and anchor design, including concrete, soil, edge distances, embedment, bolt grade and tightening values. This interface drawing is not a footing construction detail.

# Proposed project specification

**Design brief for review. Proposed values are not tested ratings.**

| | |
|---|---|
| Intended age - proposal | **3-8 years; requires representative fit and motion assessment** |
| User / load objective | **2 seated users; 50 kg per seat / 100 kg combined design objective. Not a safe working load.** |
| Space reservation | **6.50 x 4.30 m (27.95 m2), preliminary planning allowance** |
| Fall-height planning | **Model envelope upper bound 1.59 m above datum; not measured free height of fall. See common guide.** |
| Surfacing - proposal | **Impact-attenuating system with documented critical fall height at least 2.0 m, conditional on the guide assumptions** |
| Finish - proposal | **Outdoor PE; corrosion-protected steel with exterior polyester powder coat; spring-maker-approved coating** |
| Care - proposed schedule | **Before opening: visual check. Monthly: functional inspection. Annually: detailed competent-person inspection.** |
| Warranty - draft offer | **24 months from delivery for material/workmanship defects. Commercial proposal only; see common guide.** |

MASS METHOD / READ WITH THE COMMON GUIDE

Sum of listed part-instance volumes x assumed material densities. Estimated model mass: 65.7 kg. Springs, unspecified bearing materials and provisional grades limit accuracy. No measured tolerance is claimed. Coatings, weld additions, separate site anchors, concrete and packaging are excluded.