HP-SS-202

Panda Buddies

SPRING SEESAW / PRODUCT FACTS

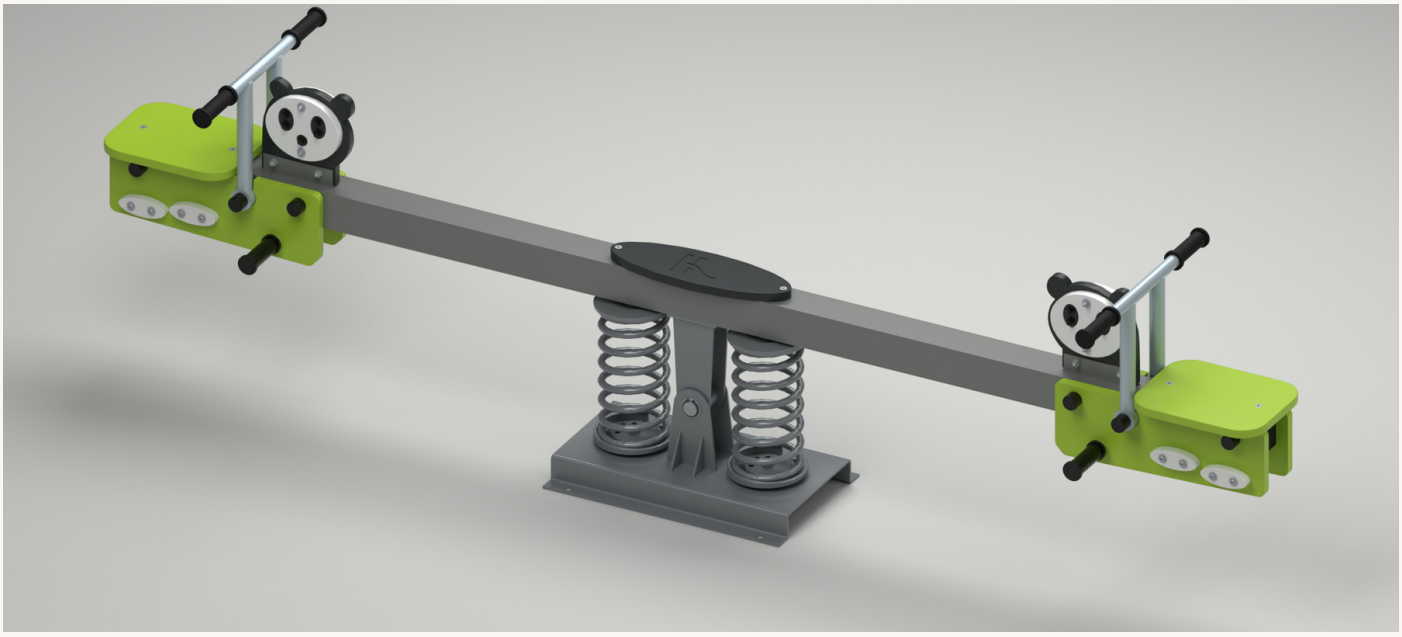

Round ears, oval eye patches and white faces make Panda Buddies instantly recognisable. Apple-green seats and white bamboo-leaf details complete the composition.

Overall model size	**2600 x 490 x 703 mm**
Neutral seat top	**484 mm above model base datum**
Seating layout	**2 seating positions; one at each end**
Model materials	**PE panels / steel frame; material grades provisional**
Calculated model mass	**66.1 kg - theoretical estimate, not measured net weight**
Panel / beam dimensions	**19 mm PE; 2530 x 80 x 80 x 3 mm beam**

HOW TO READ THIS SHEET

Page 1 records model facts and a conditional mass calculation. Page 3 contains new design proposals. This revision is for review, not permission to manufacture, install or open for use.

Dimensions & interface

Model dimensions in mm. Reference views are not to scale.

01 / FRONT

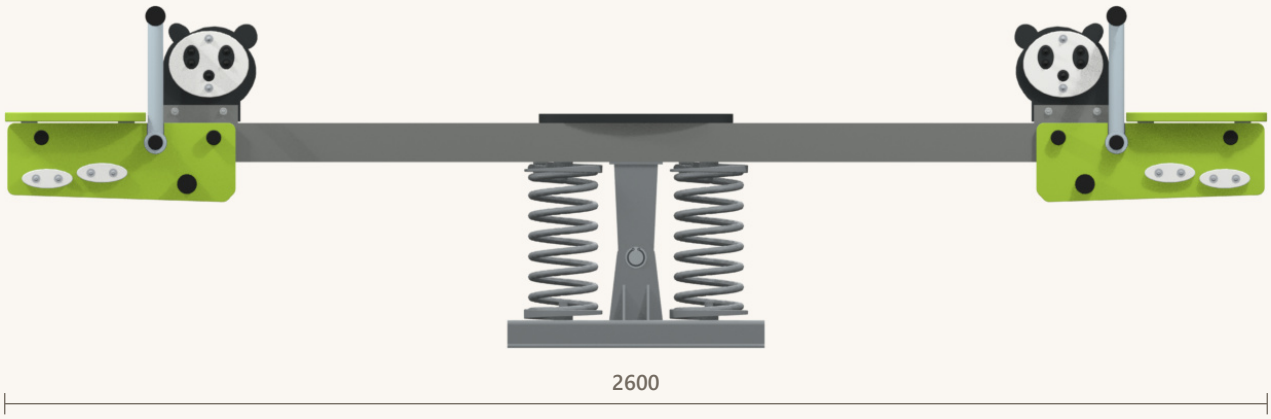

02 / SIDE

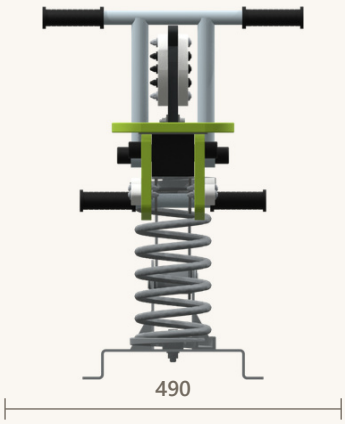

03 / TOP

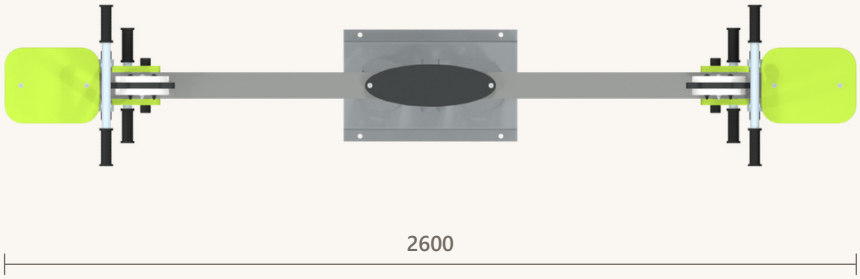

04 / BASE ANCHOR INTERFACE

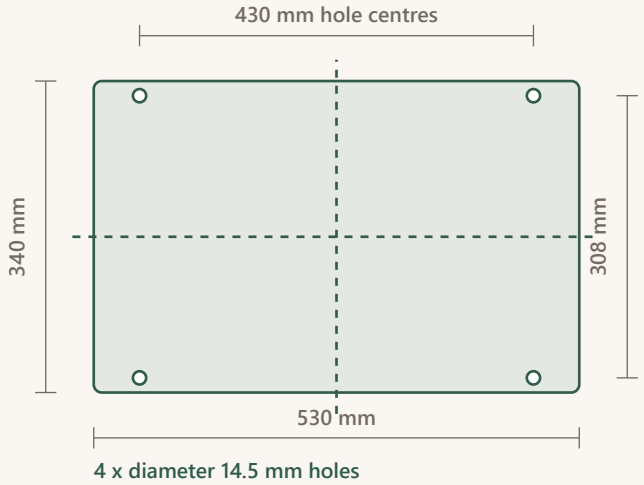

Base: 530 x 340 x 57 mm; nominal folded plate thickness 5 mm. Hole centres: X = +/-215 mm, Y = +/-154 mm from the model centre. Hole diameter does not specify an anchor size or capacity.

The installer needs a site-specific foundation and anchor design, including concrete, soil, edge distances, embedment, bolt grade and tightening values. This interface drawing is not a footing construction detail.

Proposed project specification

Design brief for review. Proposed values are not tested ratings.

Intended age - proposal	3-8 years; requires representative fit and motion assessment
User / load objective	2 seated users; 50 kg per seat / 100 kg combined design objective. Not a safe working load.
Space reservation	6.50 x 4.30 m (27.95 m2), preliminary planning allowance
Fall-height planning	Model envelope upper bound 1.59 m above datum; not measured free height of fall. See common guide.
Surfacing - proposal	Impact-attenuating system with documented critical fall height at least 2.0 m, conditional on the guide assumptions
Finish - proposal	Outdoor PE; corrosion-protected steel with exterior polyester powder coat; spring-maker-approved coating
Care - proposed schedule	Before opening: visual check. Monthly: functional inspection. Annually: detailed competent-person inspection.
Warranty - draft offer	24 months from delivery for material/workmanship defects. Commercial proposal only; see common guide.

MASS METHOD / READ WITH THE COMMON GUIDE

Sum of listed part-instance volumes x assumed material densities. Estimated model mass: 66.1 kg. Springs, unspecified bearing materials and provisional grades limit accuracy. No measured tolerance is claimed. Coatings, weld additions, separate site anchors, concrete and packaging are excluded.