FY316-05

乐拍鼓 | Tubular percussion instrument

技术资料 / TECHNICAL DATA SHEET

01 主视图 / MAIN VIEW

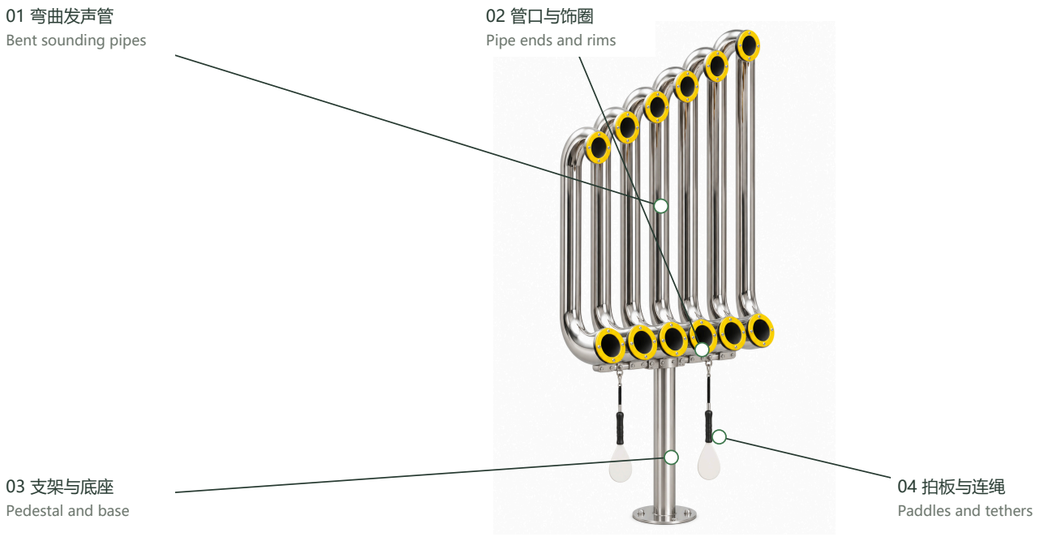

02 第二视图 / SECOND VIEW

未提供 / Not specified

03 俯视图 / TOP VIEW

未提供 / Not specified

材质说明 / MATERIAL SPECIFICATION

材料：铝管、镀锌钢管、不锈钢/镀锌金属、钢芯涤纶绳。部件分配见明细表。

Materials: aluminium tube, galvanized steel tubes, stainless steel / galvanized metal, steel-core polyester rope. See the component schedule for allocation.

产品参数 / PRODUCT DATA

长度 Length	1000 mm / 100 cm
宽度 Width	400 mm / 40 cm
总高 Total height	2400 mm / 240 cm
年龄 Age group	**待确认 / TBC**
人数 Users	**待确认 / TBC**
跌落高度 Free fall	**待确认 / TBC**
安全区 Safety zone	**待确认 / TBC**

材质状态 / MATERIAL STATUS

● 材质 / Materials　　仅列确认材质 / Confirmed only

材质确认不代表规格确认 / Material status excludes unspecified sizes

FY316-05

乐拍鼓 | Tubular percussion instrument

技术资料 / TECHNICAL DATA SHEET

部件与材质明细 / COMPONENT & MATERIAL SCHEDULE

编号	部件 / COMPONENT	材质 / MATERIAL	部件说明 / FUNCTION	状态 / STATUS
01	弯曲发声管 Bent sounding pipes	铝管 Aluminium tube	管组；管数、弯曲和音阶须复核。 Pipe bank; counts, bends and scale need verification.	材质已确认 Confirmed
02	管口与饰圈 Pipe ends and rims	铝管 Aluminium tube	黄色管口饰圈；开口及倒角规格未提供。 Yellow pipe-end rims; opening and edge-treatment specifications not supplied.	材质已确认 Confirmed
03	支架与底座 Pedestal and base	管式支架为镀锌钢管；非管底座为不锈钢/镀锌金属。 Tubular supports: galvanized steel; non-tubular base: stainless steel / galvanized metal.	银色支撑；隐藏固定和基础尺寸待确认。 Silver support; concealed fixings and foundation dimensions TBC.	范围已确认 Range confirmed
04	拍板与连绳 Paddles and tethers	拍板：铝材；连接绳：钢芯涤纶。 Paddle: aluminium; tether: steel-core polyester.	两把拍板及防丢连绳；供货配置待确认。 Two paddles and tethers; supplied configuration TBC.	材质已确认 Confirmed

音阶、调音、发声件数量及安装需厂家复核。
Scale, tuning, sound-element counts and installation require verification.

未提供的厚度、管径、涂层、连接、承载及安全参数未作推定。
Unspecified thicknesses, tube sizes, finishes, connections, loads and safety parameters are not inferred.